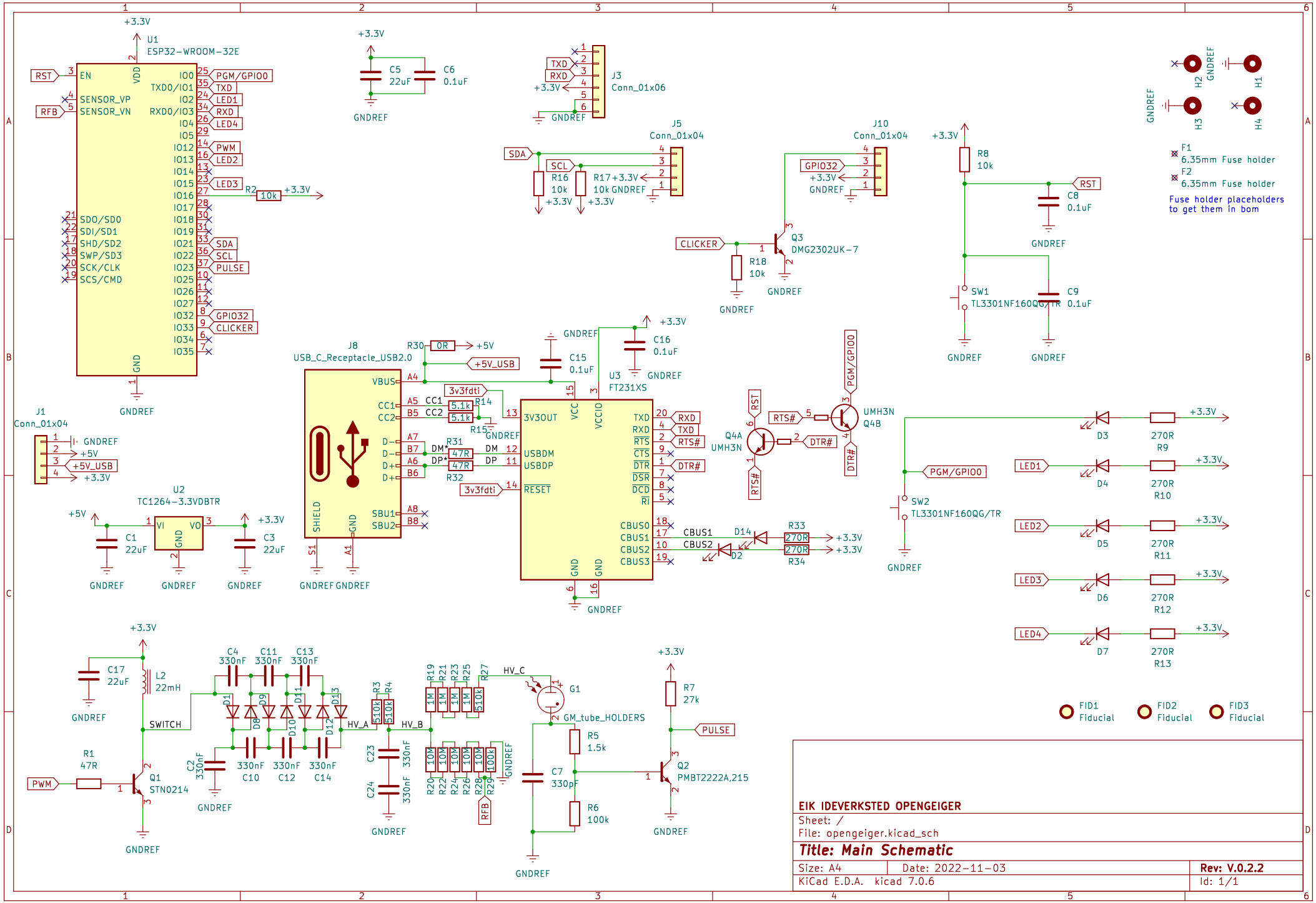
U1
ESP32-WROOM-32E
RST
RFB
EN
SENSOR_VP
SENSOR_VN
VDD
GND
SDO/SD0
SDI/SD1
SHD/SD2
SWP/SD3
SCK/CLK
SCS/CMD
IO0
TXD0/IO1
IO2
RXD0/IO3
IO4
IO5
IO12
IO13
IO14
IO15
IO16
IO17
IO18
IO19
IO21
IO22
IO23
IO25
IO26
IO27
IO32
IO33
IO34
IO35
PGM/GPIO0
TXD
LED1
RXD
LED4
PWM
LED2
LED3
SDA
SCL
PULSE
GPIO32
CLICKER
R2
10k
+3.3V
GNDREF
C5
22uF
C6
0.1uF
J3
Conn_01x06
TXD
RXD
J5
Conn_01x04
R16
10k
R17
10k
J10
Conn_01x04
GPIO32
Q3
DMG2302UK-7
R18
10k
R8
10k
C8
0.1uF
SW1
TL3301NF160QG/TR
C9
0.1uF
H1
H2
H3
H4
F1
6.35mm Fuse holder
F2
6.35mm Fuse holder
Fuse holder placeholders
to get them in bom
J1
Conn_01x04
+5V
+5V_USB
J8
USB_C_Receptacle_USB2.0
R30
0R
VBUS
CC1
CC2
D-
D+
SHIELD
GND
SBU1
SBU2
R14
5.1k
R15
5.1k
R31
47R
R32
47R
DM*
DP*
DM
DP
3v3fdti
C15
0.1uF
C16
0.1uF
U3
FT231XS
3V3OUT
USBDM
USBDP
RESET
VCC
VCCIO
TXD
RXD
RTS
CTS
DTR
DSR
DCD
RI
RTS#
DTR#
CBUS0
CBUS1
CBUS2
CBUS3
Q4A
UMH3N
Q4B
UMH3N
D14
D2
R33
270R
R34
270R
U2
TC1264-3.3VDBTR
VI
VO
C1
22uF
C3
22uF
D3
270R
R9
D4
270R
R10
D5
270R
R11
D6
270R
R12
D7
270R
R13
LED1
LED2
LED3
LED4
SW2
TL3301NF160QG/TR
FID1
Fiducial
FID2
Fiducial
FID3
Fiducial
C17
22uF
L2
22mH
SWITCH
R1
47R
Q1
STN0214
C4
330nF
C11
330nF
C13
330nF
D1
D8
D9
D10
D11
D12
D13
C2
330nF
C10
330nF
C12
330nF
C14
330nF
HV_A
HV_B
R3
510k
R4
510k
C23
330nF
C24
330nF
R19
1M
R21
1M
R23
1M
R25
1M
R27
510k
R20
10M
R22
10M
R24
10M
R26
10M
R28
10M
R29
100k
HV_C
G1
GM_tube_HOLDERS
R5
1.5k
C7
330pF
R6
100k
R7
27k
Q2
PMBT2222A,215
EIK IDEVERKSTED OPENGEIGER
Sheet: /
File: opengeiger.kicad_sch
Title: Main Schematic
Size: A4
Date: 2022-11-03
Rev: V.0.2.2
KiCad E.D.A. kicad 7.0.6
Id: 1/1