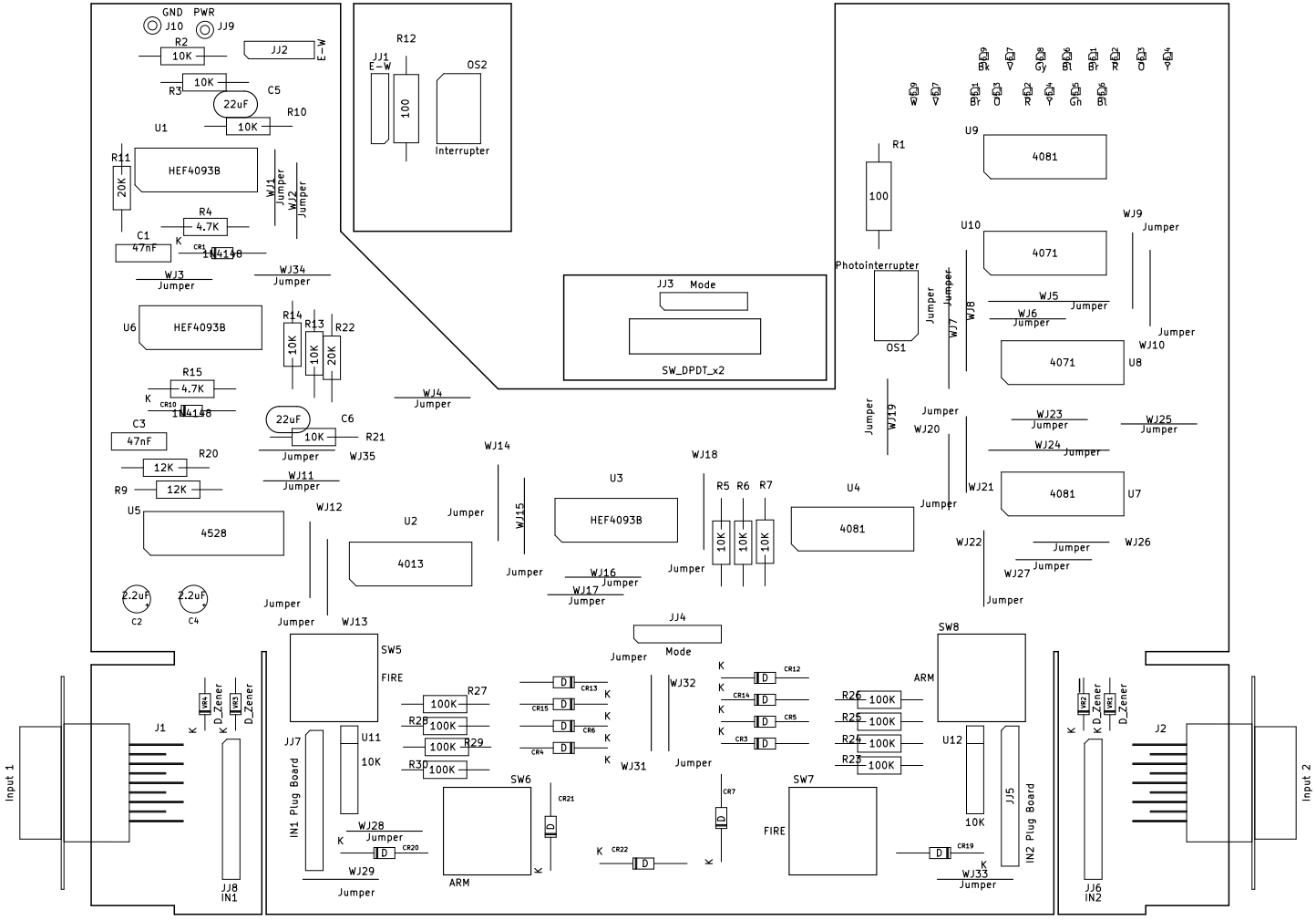
GND PWR
J10 JJ9
R2 10K
JJ2 E-W
R3 10K
C5 22uF
R10 10K
U1 HEF4093B
R11 20K
WJ1 Jumper
WJ2 Jumper
R4 4.7K
C1 47nF
CR1 1N4148
WJ3 Jumper
WJ34 Jumper
U6 HEF4093B
R14 10K
R13 10K
R22 20K
R15 4.7K
CR10 1N4148
C3 47nF
C6 22uF
R21 10K
WJ35 Jumper
WJ4 Jumper
R20 12K
R9 12K
WJ11 Jumper
U5 4528
WJ12 Jumper
C2 2.2uF
C4 2.2uF
R12 100
JJ1 E-W
OS2 Interrupter
JJ3 Mode
SW_DPDT_x2
WJ14 Jumper
WJ15 Jumper
U3 HEF4093B
WJ16 Jumper
WJ17 Jumper
U2 4013
WJ18 Jumper
R5 10K
R6 10K
R7 10K
U4 4081
JJ4 Mode
WJ13 Jumper
SW5 FIRE
J1
Input 1
D_Zener
JJ7 IN1 Plug Board
U11 10K
R27 100K
R28 100K
R29 100K
R30 100K
CR13
CR15
CR6
CR4
WJ32 Jumper
WJ31 Jumper
CR12
CR14
CR5
CR3
SW6 ARM
CR21
WJ28 Jumper
CR20
WJ29 Jumper
CR22
CR7
SW7 FIRE
R26 100K
R25 100K
R24 100K
R23 100K
SW8 ARM
U12 10K
JJ5 IN2 Plug Board
CR19
WJ33 Jumper
JJ8 IN1
JJ6 IN2
J2
Input 2
R1 100
Photointerrupter
OS1
U9 4081
U10 4071
WJ9 Jumper
WJ5 Jumper
WJ6 Jumper
WJ7 Jumper
WJ8 Jumper
WJ10 Jumper
U8 4071
WJ19 Jumper
WJ20 Jumper
WJ23 Jumper
WJ25 Jumper
WJ24 Jumper
WJ21 Jumper
U7 4081
WJ22 Jumper
WJ26 Jumper
WJ27 Jumper