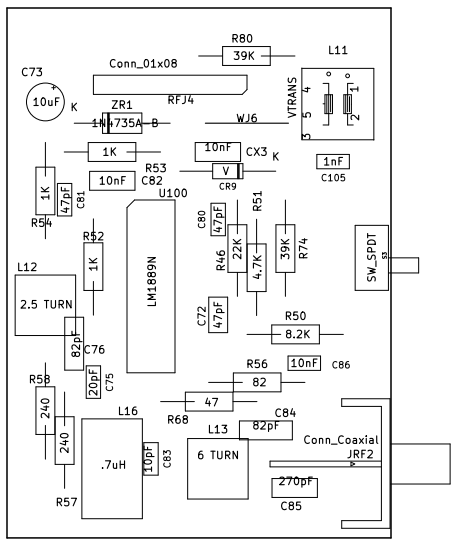

Sheet:
File: RF.kicad_pcb

Title:

Size: B	Date:	Rev:
KiCad E.D.A. kicad (5.0.1-3-g963ef8bb5)		Id: 1/1