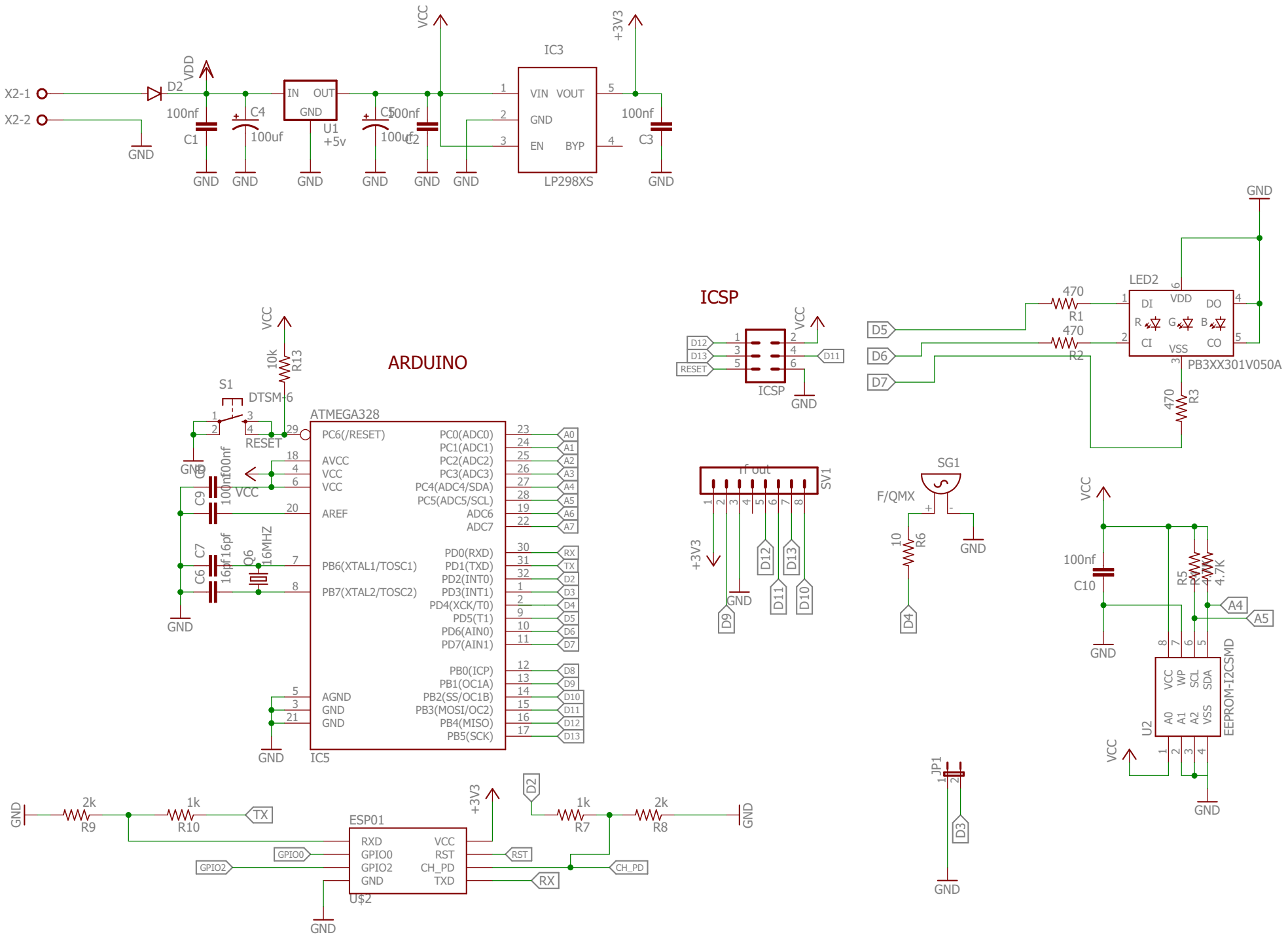
X2-1
X2-2
GND
D2
VDD
100nf
C1
C4
100uf
IN OUT
GND
U1
+5v
C5
100uf
100nf
C2
VCC
IC3
VIN VOUT
GND
EN BYP
LP298XS
+3V3
100nf
C3
ARDUINO
S1
DTSM-6
RESET
10k
R13
ATMEGA328
PC6(/RESET)
AVCC
VCC
AREF
PB6(XTAL1/TOSC1)
PB7(XTAL2/TOSC2)
AGND
PC0(ADC0)
PC1(ADC1)
PC2(ADC2)
PC3(ADC3)
PC4(ADC4/SDA)
PC5(ADC5/SCL)
ADC6
ADC7
PD0(RXD)
PD1(TXD)
PD2(INT0)
PD3(INT1)
PD4(XCK/T0)
PD5(T1)
PD6(AIN0)
PD7(AIN1)
PB0(ICP)
PB1(OC1A)
PB2(SS/OC1B)
PB3(MOSI/OC2)
PB4(MISO)
PB5(SCK)
IC5
C8
100nf
C9
100nf
C7
16pf
C6
16pf
Q6
16MHZ
ICSP
D12
D13
RESET
D11
ICSP
LED2
470
R1
470
R2
470
R3
DI VDD DO
R G B
CI VSS CO
PB3XX301V050A
D5
D6
D7
SV1
rf out
+3V3
D9
D12
D13
D11
D10
SG1
F/QMX
10
R6
D4
100nf
C10
R5
R4
4.7K
A4
A5
U2
VCC WP SCL SDA
A0 A1 A2 VSS
EEPROM-I2CSMD
JP1
D3
2k
R9
1k
R10
TX
ESP01
RXD
GPIO0
GPIO2
GND
VCC
RST
CH_PD
TXD
U$2
RST
RX
CH_PD
+3V3
D2
1k
R7
2k
R8