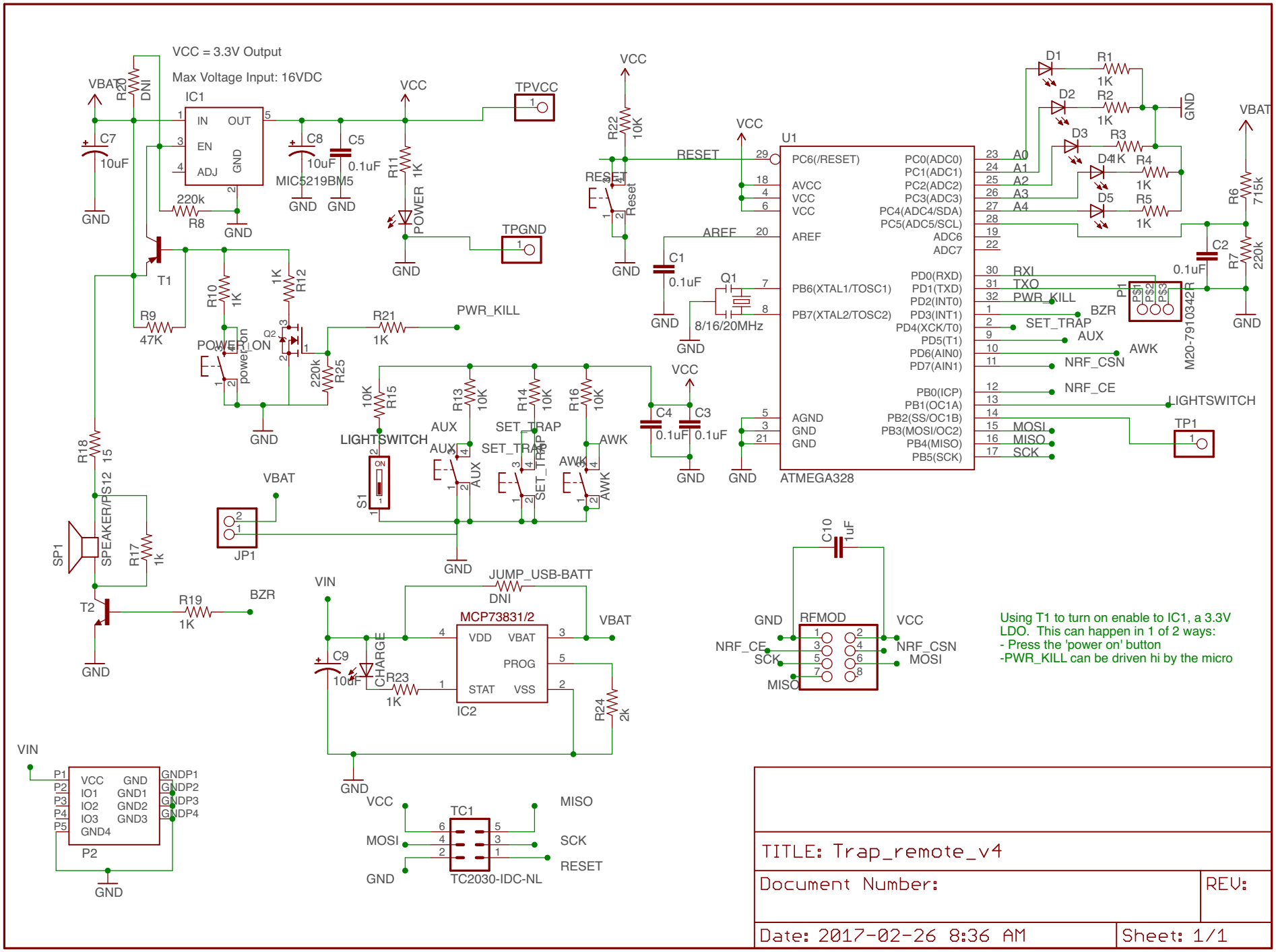
VCC = 3.3V Output
Max Voltage Input: 16VDC
IC1
IN
OUT
EN
ADJ
GND
MIC5219BM5
C7
10uF
C8
10uF
C5
0.1uF
R20
DNI
R8
220k
T1
R9
47K
R10
1K
R12
1K
Q2
R25
220k
POWER_ON
power_on
R21
1K
PWR_KILL
R11
1K
POWER
TPVCC
TPGND
VBAT
VCC
GND
R22
10K
RESET
Reset
C1
0.1uF
Q1
8/16/20MHz
U1
PC6(/RESET)
AVCC
VCC
AREF
PB6(XTAL1/TOSC1)
PB7(XTAL2/TOSC2)
AGND
PC0(ADC0)
PC1(ADC1)
PC2(ADC2)
PC3(ADC3)
PC4(ADC4/SDA)
PC5(ADC5/SCL)
ADC6
ADC7
PD0(RXD)
PD1(TXD)
PD2(INT0)
PD3(INT1)
PD4(XCK/T0)
PD5(T1)
PD6(AIN0)
PD7(AIN1)
PB0(ICP)
PB1(OC1A)
PB2(SS/OC1B)
PB3(MOSI/OC2)
PB4(MISO)
PB5(SCK)
ATMEGA328
A0
A1
A2
A3
A4
RXI
TXO
PWR_KILL
BZR
SET_TRAP
AUX
AWK
NRF_CSN
NRF_CE
LIGHTSWITCH
MOSI
MISO
SCK
D1
D2
D3
D4
D5
R1
R2
R3
R4
R5
1K
R6
715k
R7
220k
C2
0.1uF
P1
M20-7910342R
TP1
R18
15
SPEAKER/PS12
SP1
R17
1k
T2
R19
1K
BZR
LIGHTSWITCH
S1
R15
10K
R13
10K
R14
10K
R16
10K
AUX
SET_TRAP
AWK
C4
0.1uF
C3
0.1uF
JP1
VBAT
VIN
JUMP_USB-BATT
DNI
MCP73831/2
VDD
VBAT
PROG
STAT
VSS
IC2
C9
10uF
CHARGE
R23
1K
R24
2k
C10
1uF
RFMOD
NRF_CE
SCK
MISO
NRF_CSN
MOSI
P2
VCC
IO1
IO2
IO3
GND4
GND
GND1
GND2
GND3
GNDP1
GNDP2
GNDP3
GNDP4
TC1
TC2030-IDC-NL
MISO
SCK
RESET
MOSI
GND
Using T1 to turn on enable to IC1, a 3.3V LDO. This can happen in 1 of 2 ways:
- Press the 'power on' button
-PWR_KILL can be driven hi by the micro
TITLE: Trap_remote_v4
Document Number:
REV:
Date: 2017-02-26 8:36 AM
Sheet: 1/1