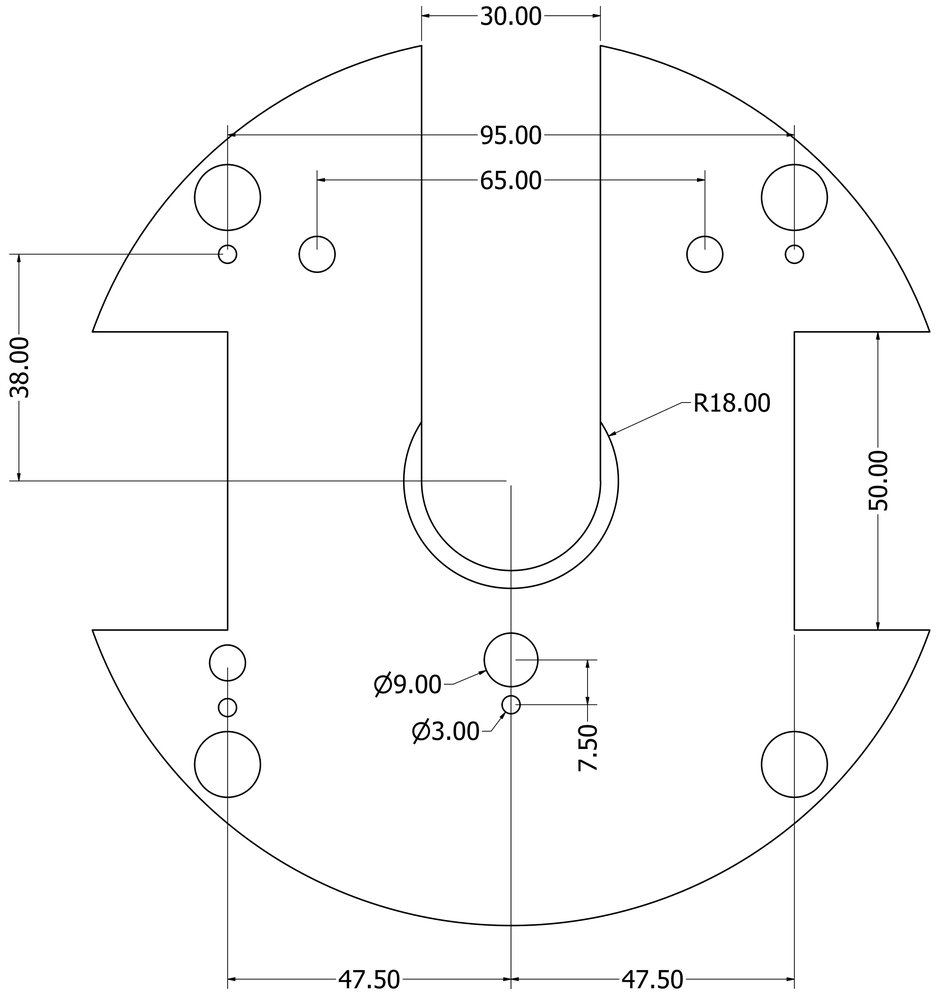

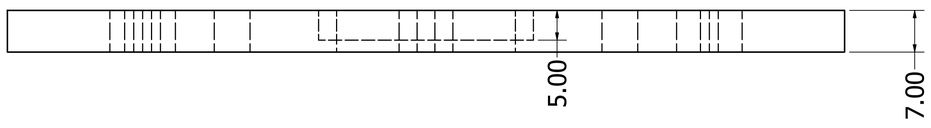

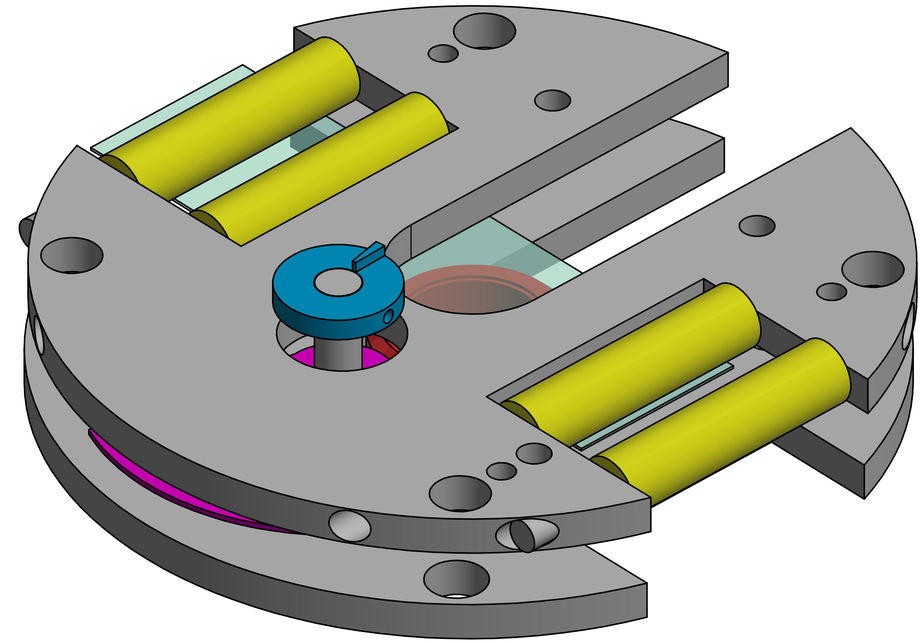

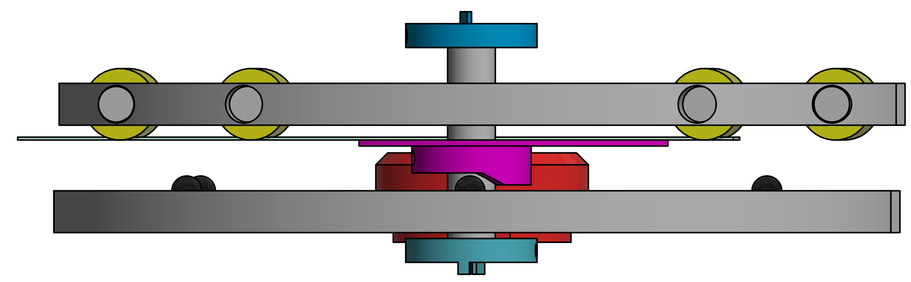

DRAWN Sebastián	07-03-2024	
CHECKED		TITLE
QA		
MFG		
APPROVED		SIZE D / DWG NO placa_2_3 / REV
		SCALE 2 : 1 / SHEET 1 OF 1