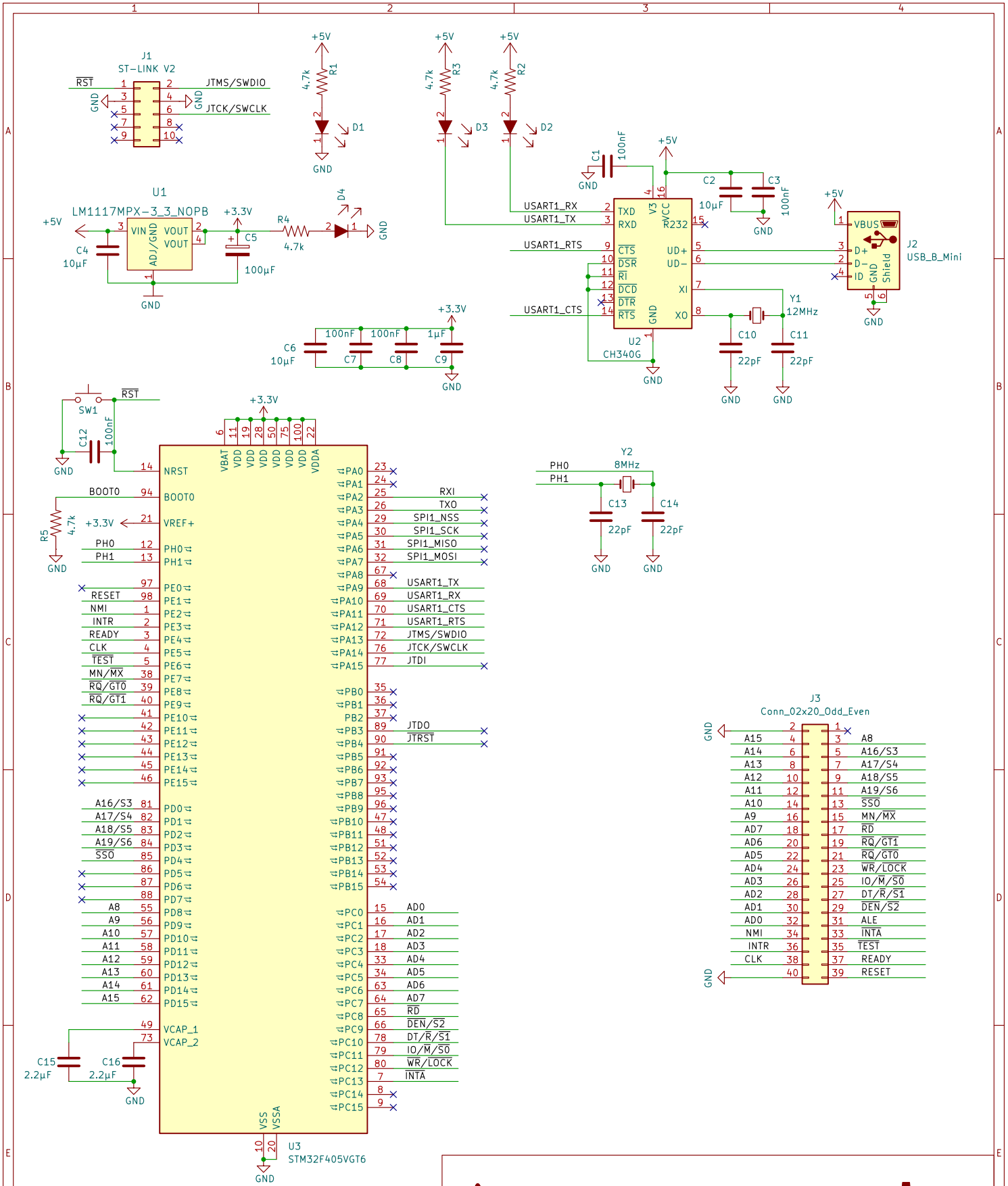

Sheet: /
File: 8088.kicad_sch

open hardware

Title: 8088 ALIEN PROBE v2

Size: USLetter | Date: | **Rev:**

KiCad E.D.A. 9.0.8 | Id: 1/1