Ultra Servo 01
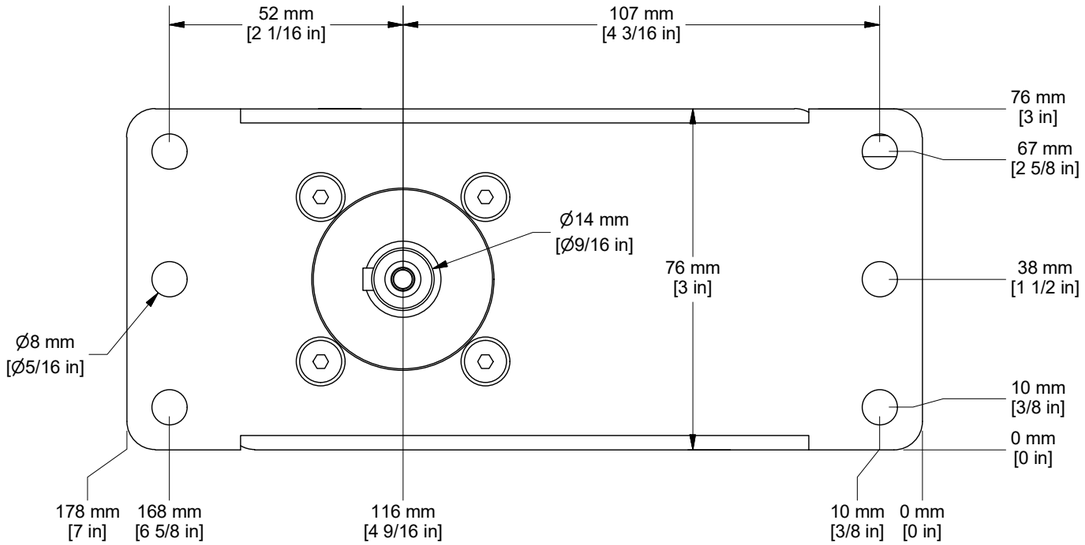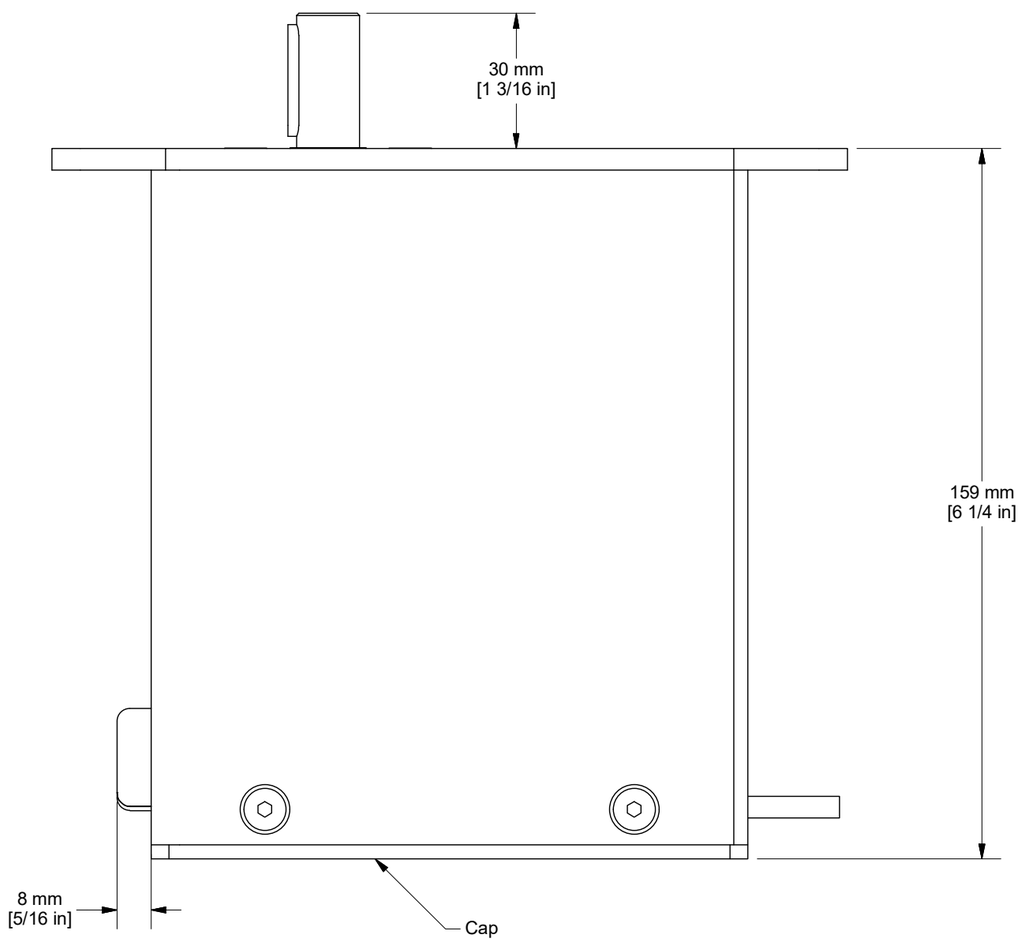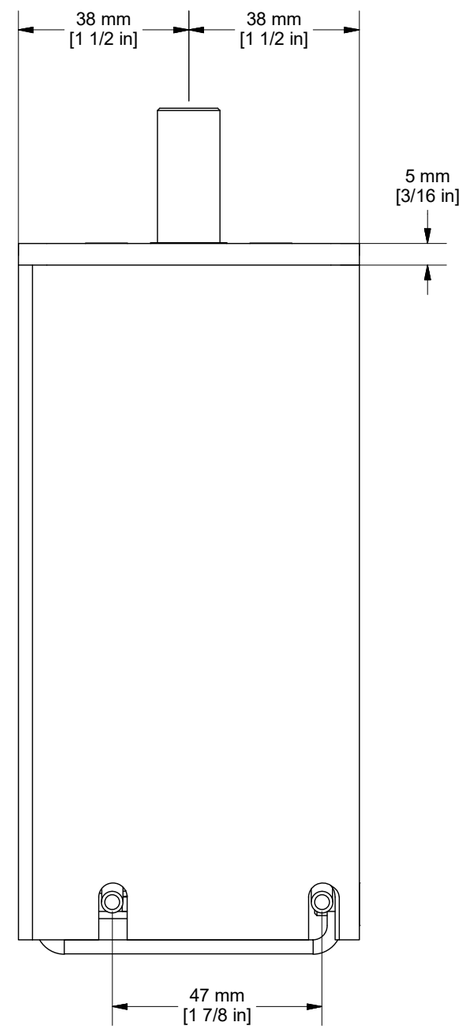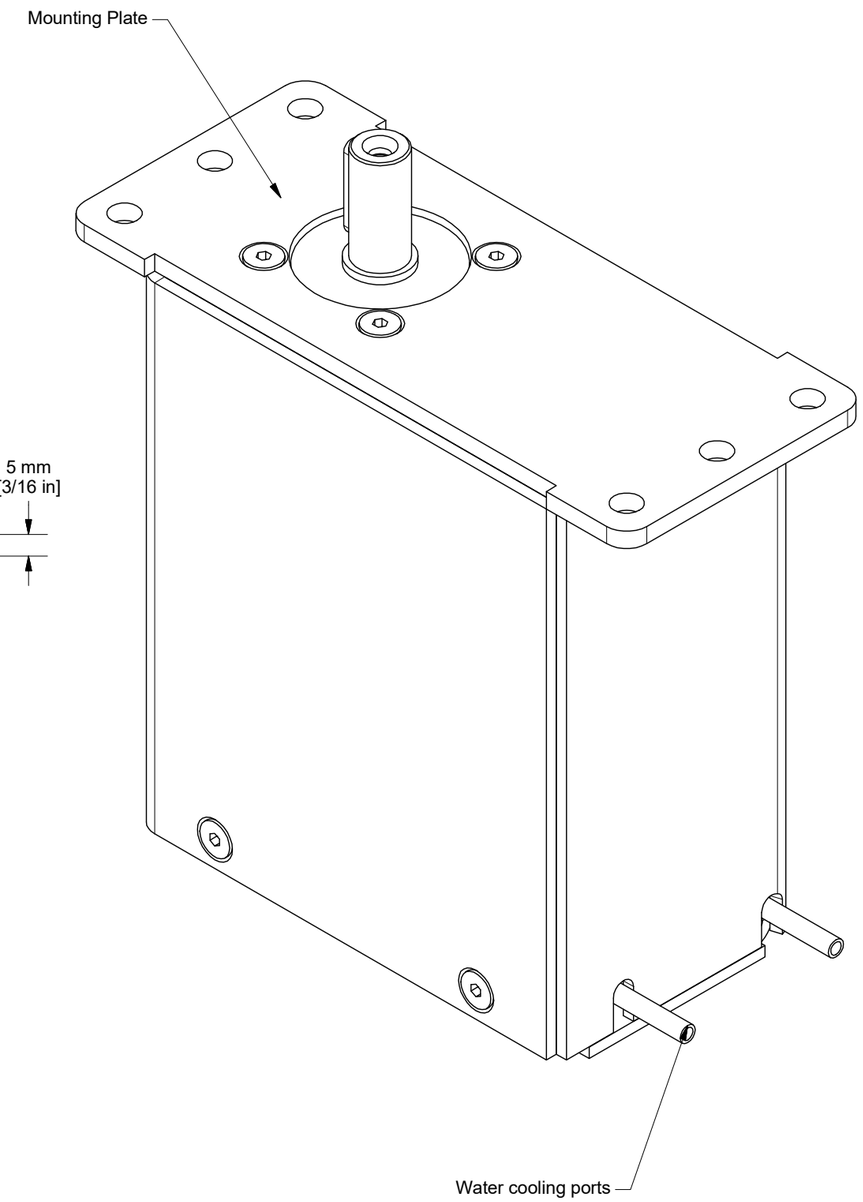
60ft*lbs stall
60 rpm @no load
12-24V input, 60A Max
Programable angle range/continious roation
6.3 lbs - 2.86kg (estimate)