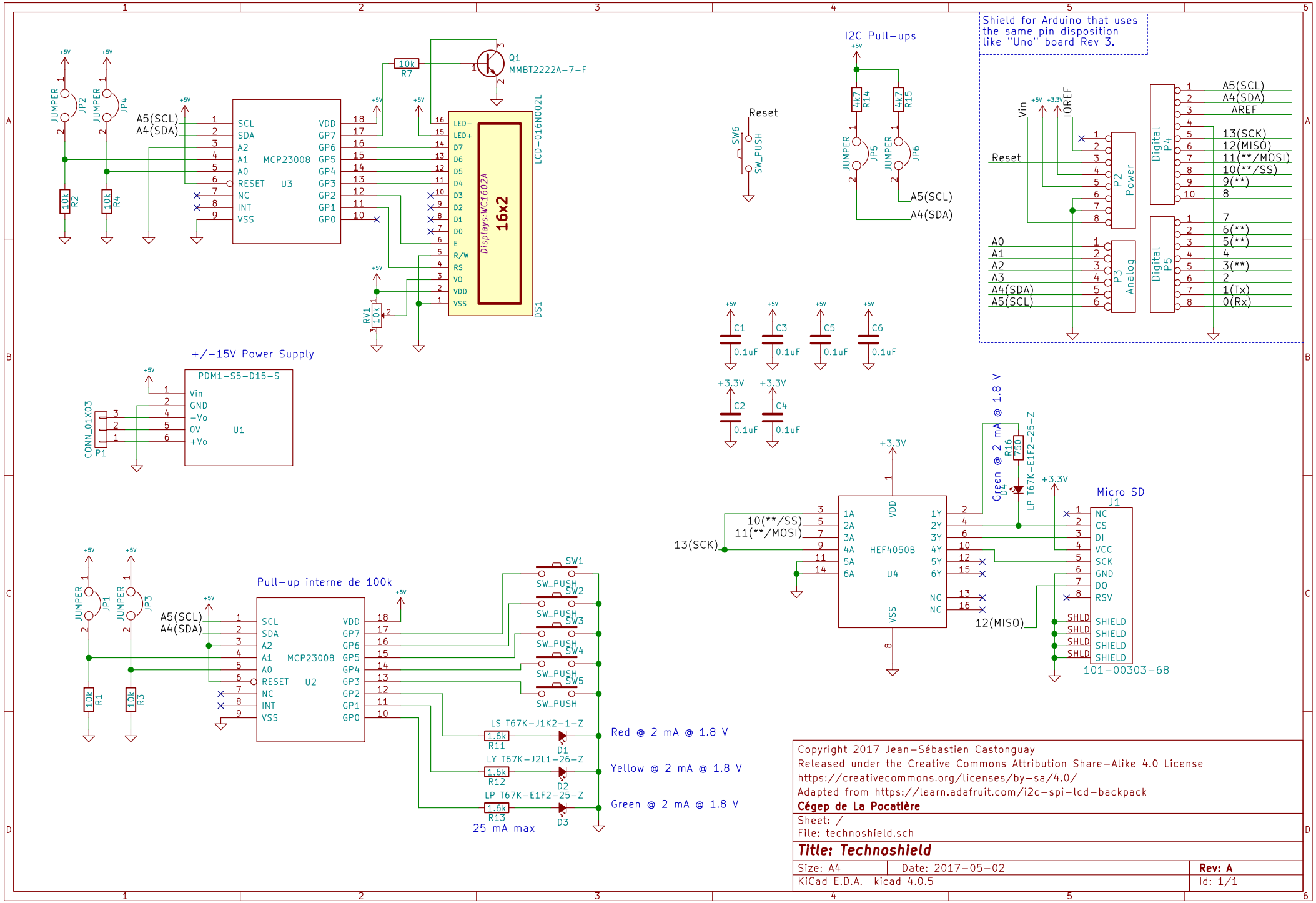

Copyright 2017 Jean-Sébastien Castonguay
Released under the Creative Commons Attribution Share-Alike 4.0 License
https://creativecommons.org/licenses/by-sa/4.0/
Adapted from https://learn.adafruit.com/i2c-spi-lcd-backpack

Cégep de La Pocatière

Sheet: /
File: technoshield.sch

Title: Technoshield

Size: A4	Date: 2017-05-02	**Rev: A**
KiCad E.D.A. kicad 4.0.5		Id: 1/1