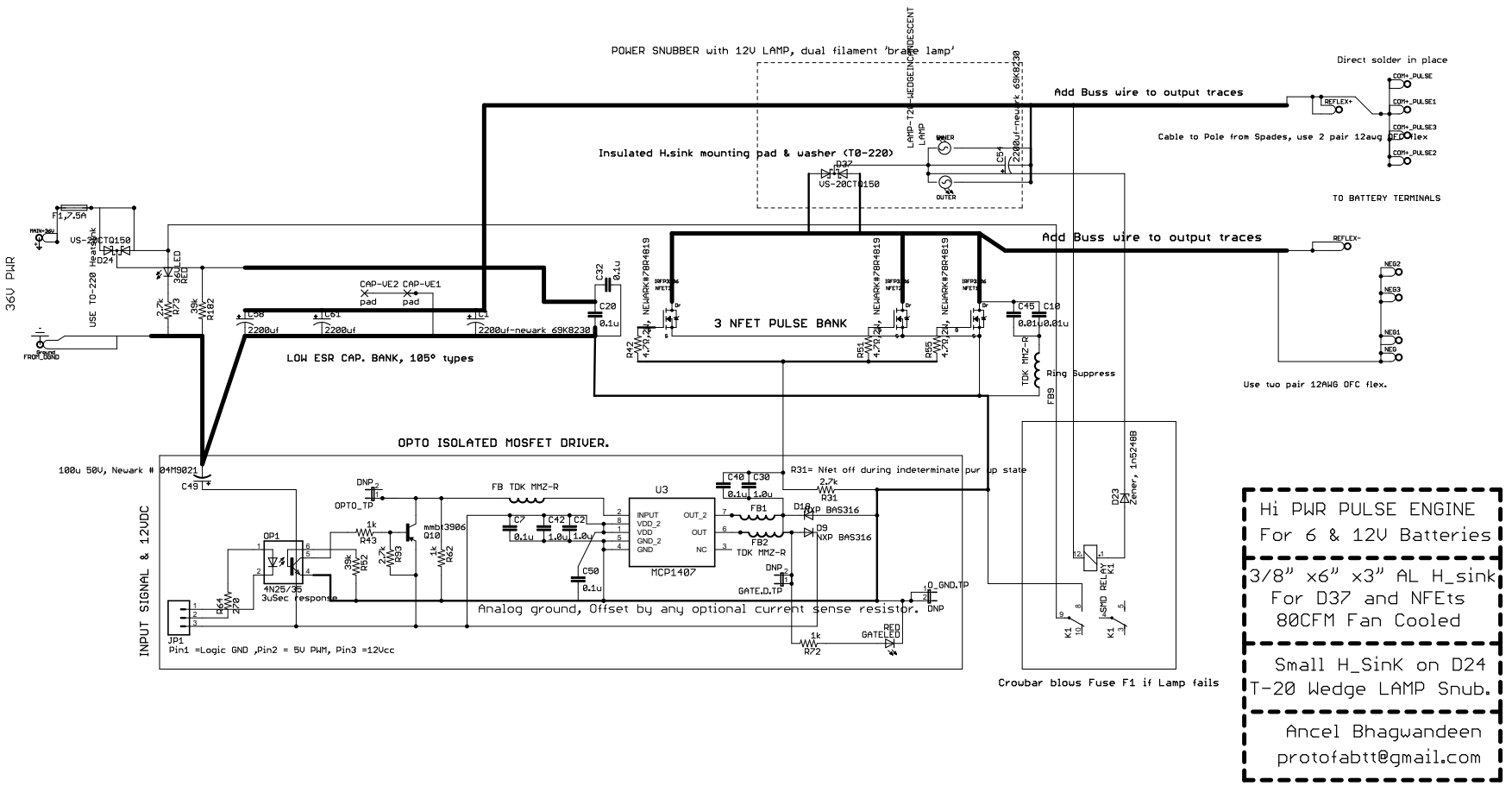

Hi PWR PULSE ENGINE
For 6 & 12V Batteries

3/8" x6" x3" AL H_sink
For D37 and NFEts
80CFM Fan Cooled

Small H_SinK on D24
T-20 Wedge LAMP Snub.

Ancel Bhagwandeen
protofabtt@gmail.com