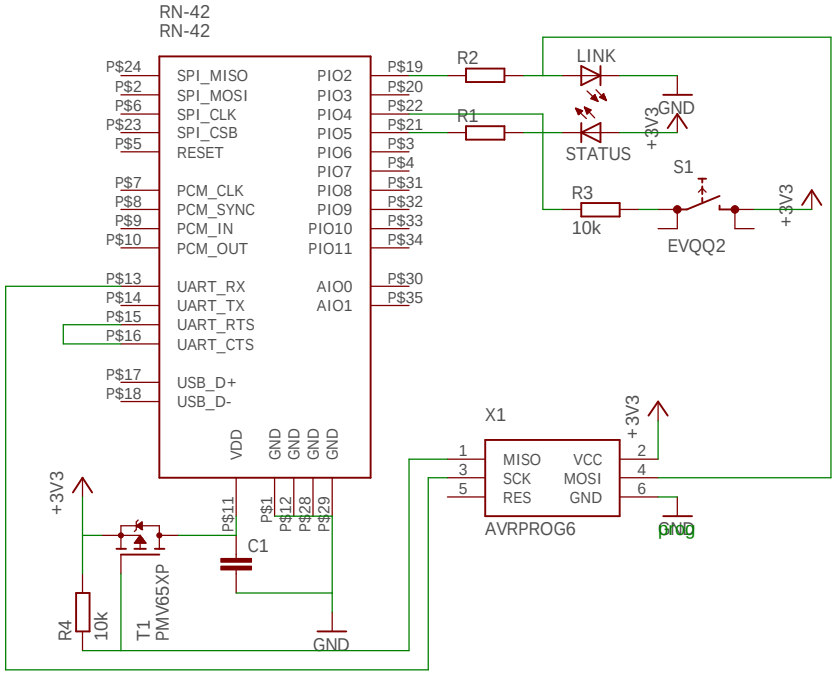
RN-42
RN-42
P$24
P$2
P$6
P$23
P$5
P$7
P$8
P$9
P$10
P$13
P$14
P$15
P$16
P$17
P$18
SPI_MISO
SPI_MOSI
SPI_CLK
SPI_CSB
RESET
PCM_CLK
PCM_SYNC
PCM_IN
PCM_OUT
UART_RX
UART_TX
UART_RTS
UART_CTS
USB_D+
USB_D-
PIO2
PIO3
PIO4
PIO5
PIO6
PIO7
PIO8
PIO9
PIO10
PIO11
AIO0
AIO1
P$19
P$20
P$22
P$21
P$3
P$4
P$31
P$32
P$33
P$34
P$30
P$35
VDD
GND
GND
GND
GND
P$11
P$1
P$12
P$28
P$29
R2
R1
LINK
STATUS
GND
+3V3
R3
10k
S1
EVQQ2
+3V3
X1
MISO
SCK
RES
VCC
MOSI
GND
AVRPROG6
+3V3
GND
C1
+3V3
R4
10k
T1
PMV65XP
GND