IoT Switch

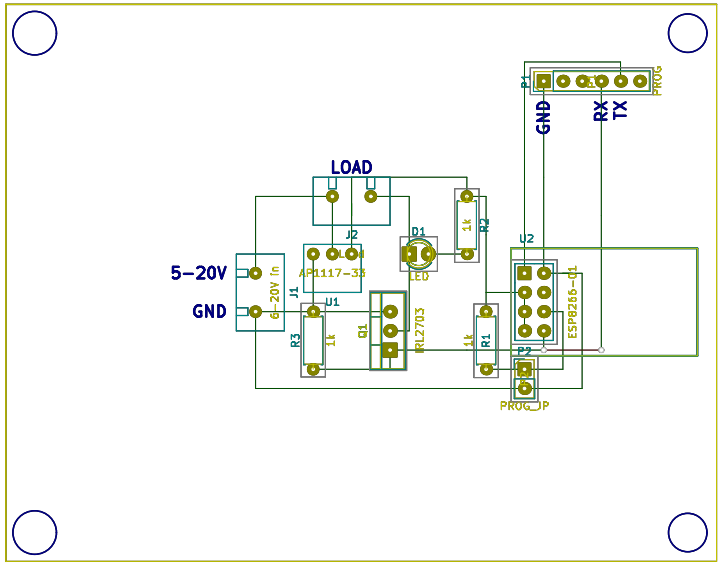

IoT Switch

Sheet:
File: iot_switch.kicad_pcb

Title: IoT Switch

Size: A4	Date: 2017-09-08	**Rev: 0**
KiCad E.D.A. kicad 4.0.7-e2-637658ubuntu16.04.1		Id: 1/1