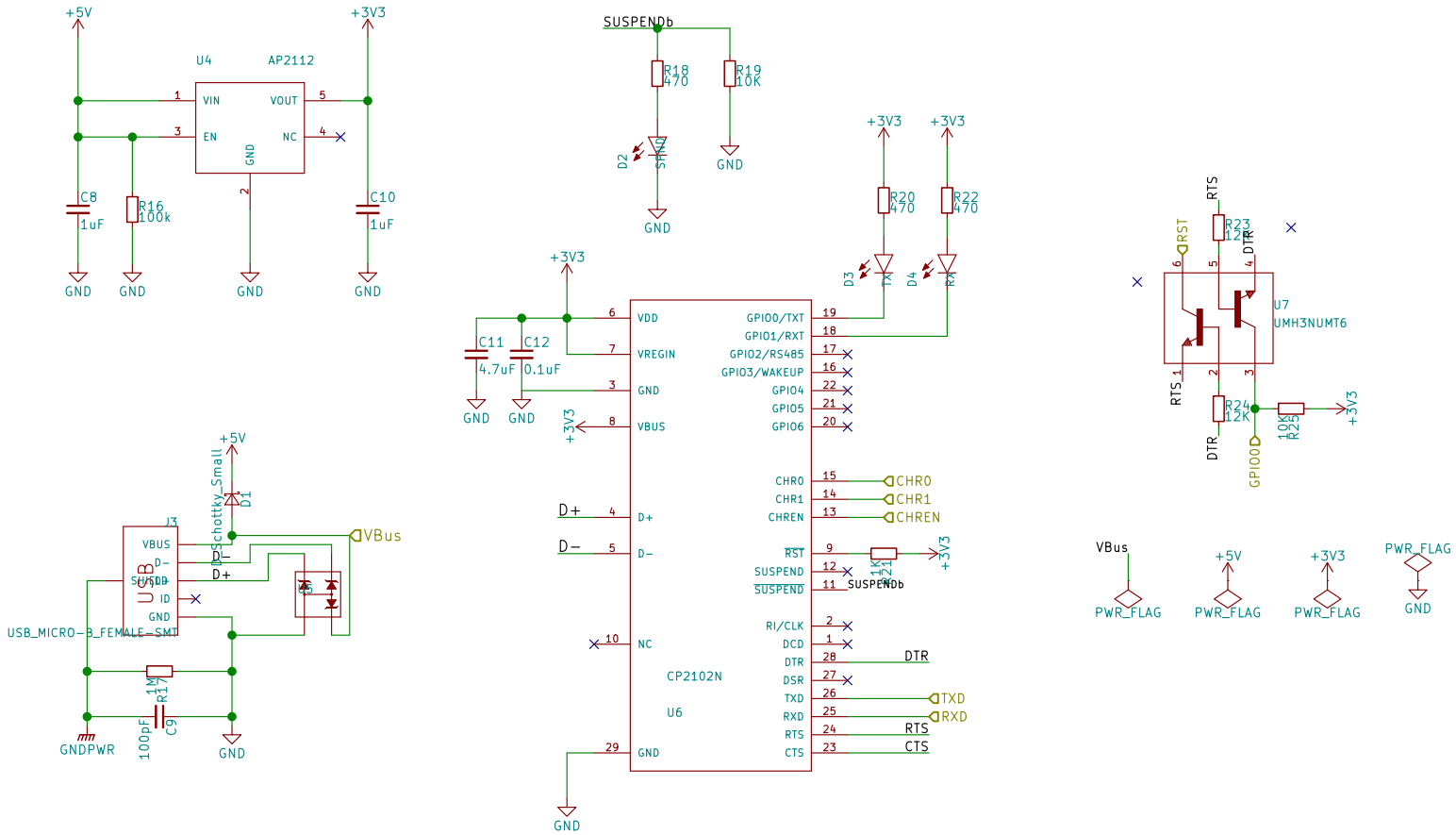

nixies.us

Sheet: /USB-UART/
File: USB-UART.sch

Title:

Size: USLetter	Date:	Rev:
KiCad E.D.A. kicad 4.0.6		Id: 3/4