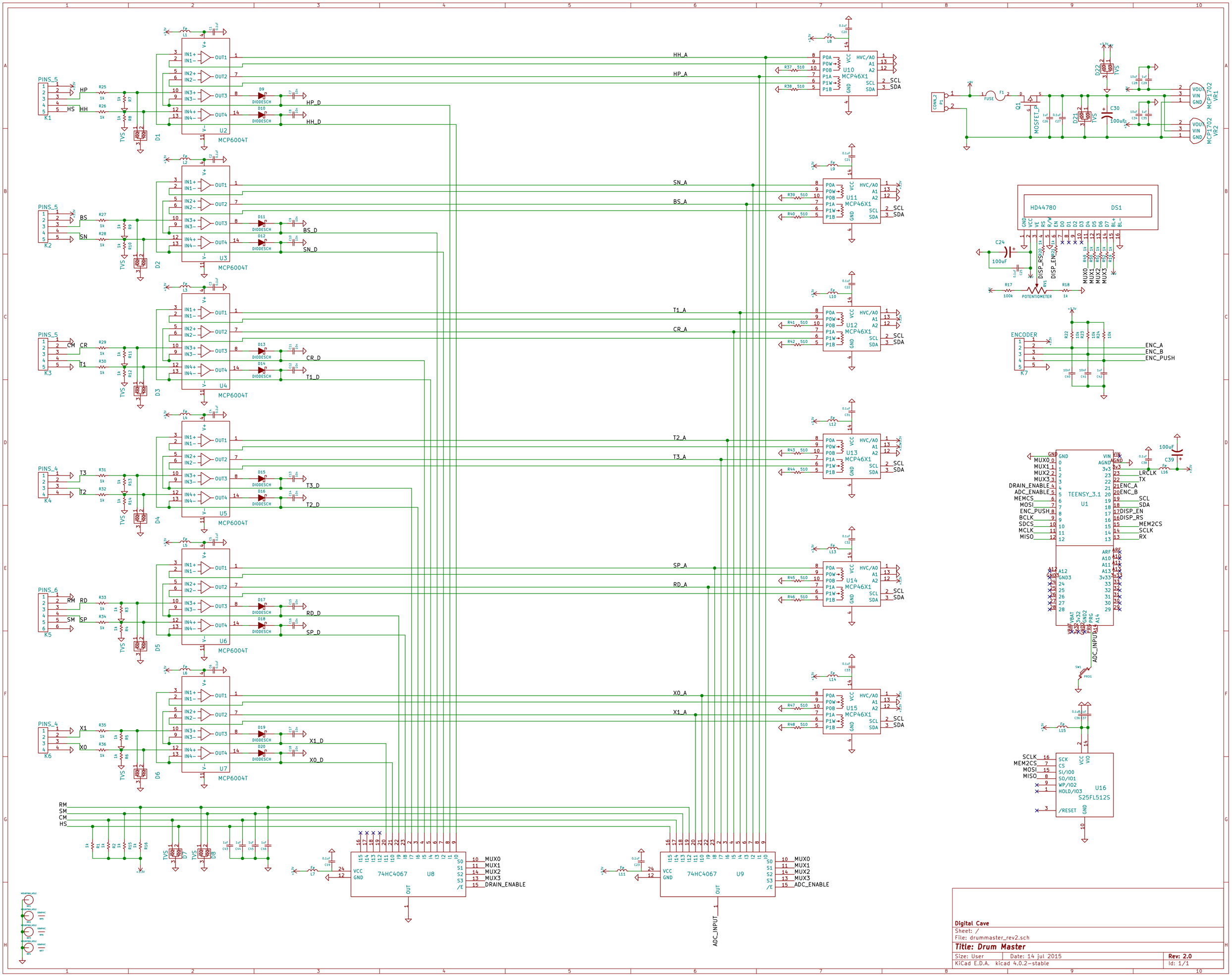
U1
TEENSY_3.1
U2
U3
U4
U5
U6
U7
U8
U9
U10
U11
U12
U13
U14
U15
U16
MCP6004T
MCP46X1
74HC4067
S25FL512S
DS1
HD44780
POTENTIOMETER
ENCODER
K1
K2
K3
K4
K5
K6
K7
HH_A
HP_A
SN_A
BS_A
T1_A
CR_A
T2_A
T3_A
SP_A
RD_A
X0_A
X1_A
HP_D
HH_D
BS_D
SN_D
CR_D
T1_D
T3_D
T2_D
RD_D
SP_D
X1_D
X0_D
ENC_A
ENC_B
ENC_PUSH
MUX0
MUX1
MUX2
MUX3
DRAIN_ENABLE
ADC_ENABLE
ADC_INPUT
Digital Cave
Sheet: /
File: drummaster_rev2.sch
Title: Drum Master
Size: User
Date: 14 jul 2015
Rev: 2.0
KiCad E.D.A. kicad 4.0.2-stable
Id: 1/1